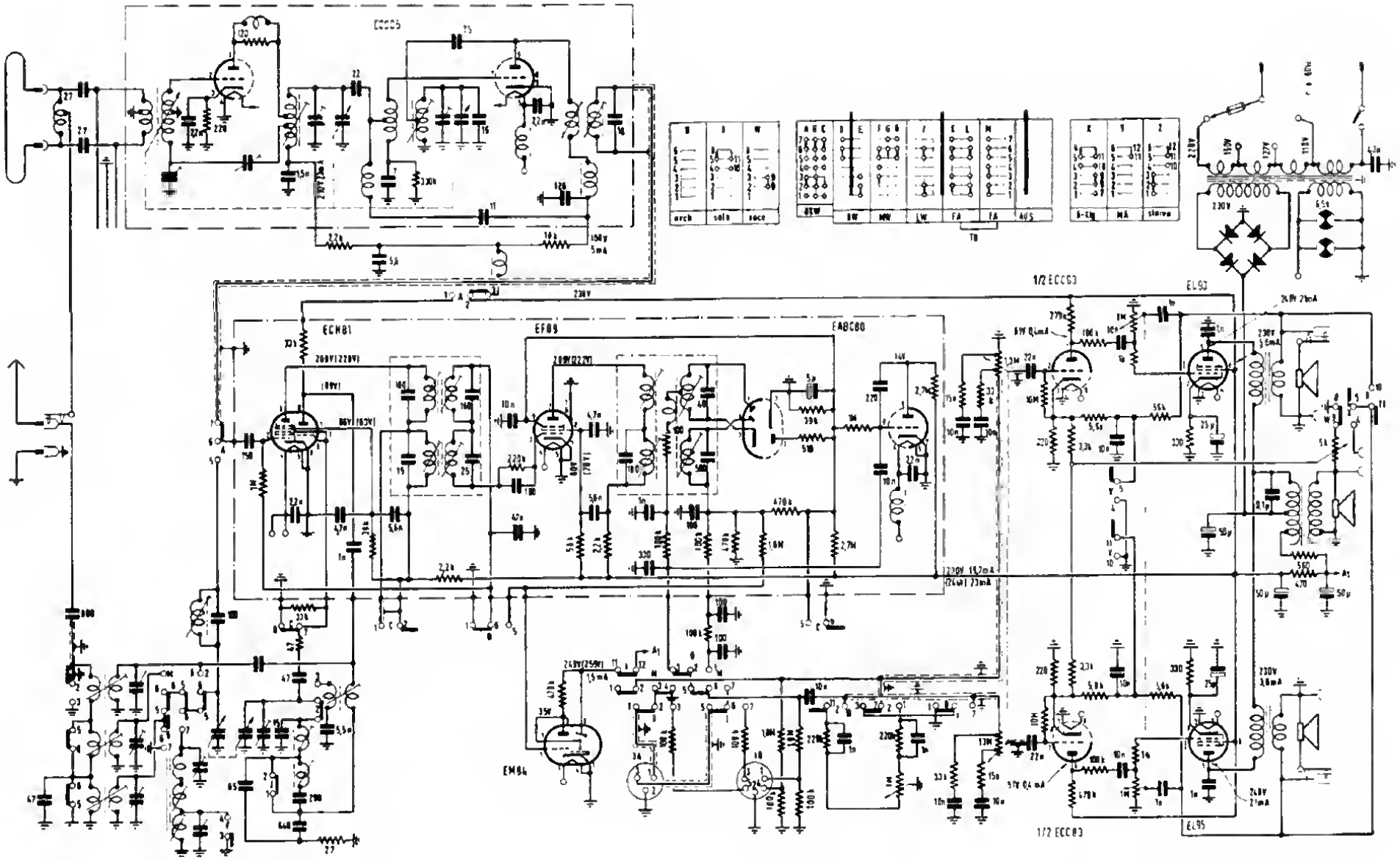

PHILCO mod. BELFAST